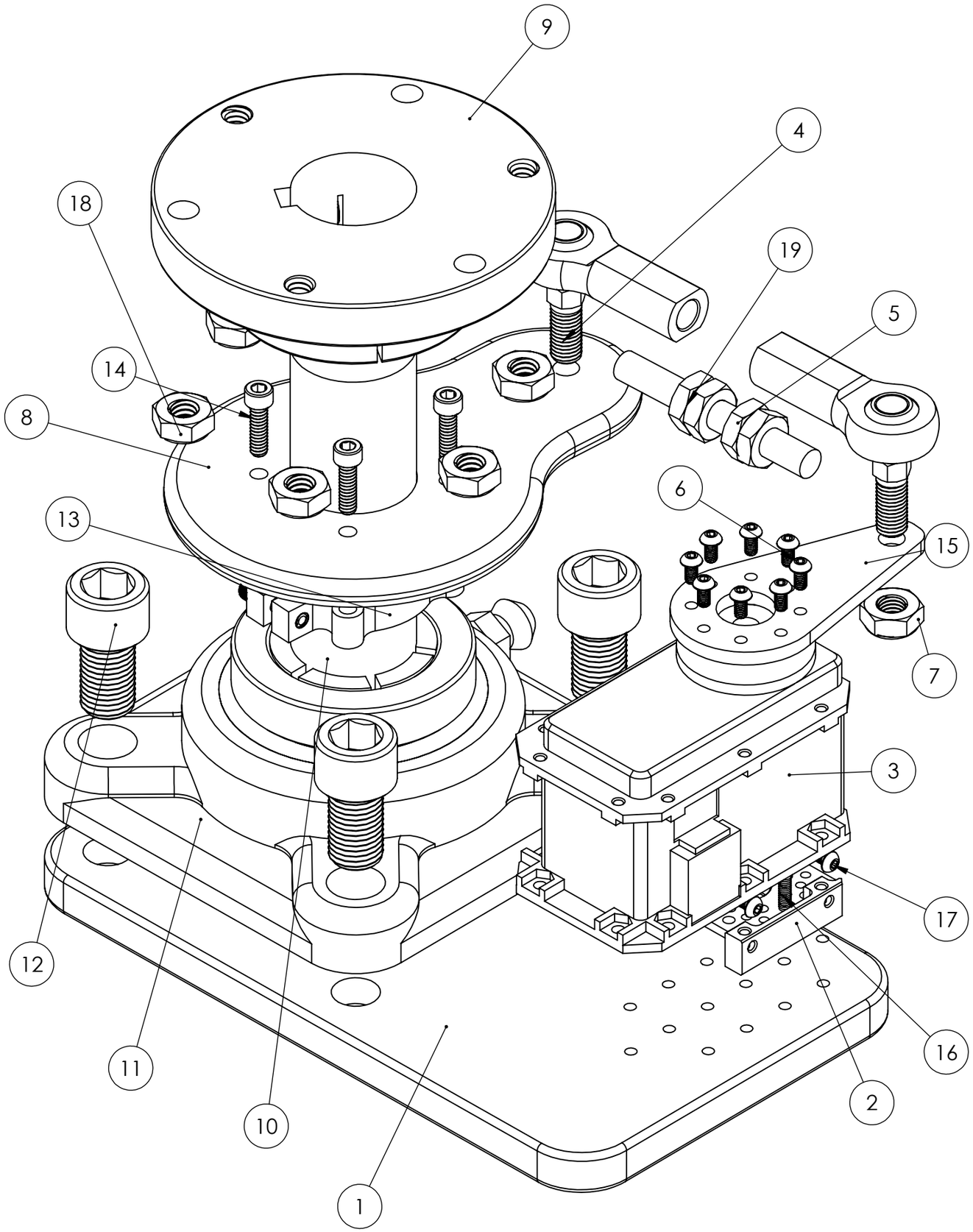

ITEM NO.	PART NUMBER	DESCRIPTION	QTY.
1	Flanged_Adapter	Protolabs Custom Part	1
2	FR08-B101K	Dynamixel Servo Mount	1
3	MX-106T_Servo	Dynamixel Servo	1
4	6072K31	McMaster Carr	2
5	Quarter_Inch_Shaft_2inch	McMaster Carr	1
6	92095A457	McMaster Carr	8
7	90101A235	McMaster Carr	2
8	Head_Turn_Rotate	Protolabs Custom Part	1
9	9684T4	McMaster Carr	1
10	Inch_Shaft	McMaster Carr	1
11	3710T51	McMaster Carr	1
12	92196A685	McMaster Carr	4
13	FaceThruShaftClamp	ServoCity	1
14	92196A148	McMaster Carr	4
15	Servo_Arm_Custom_1.5	Protolabs Custom Part	1
16	92095A461	McMaster Carr	4
17	92095A459	McMaster Carr	4
18	90101A230	McMaster Carr	6
19	93839A805	McMaster Carr	4

SOLIDWORKS Educational Product. For Instructional Use Only.